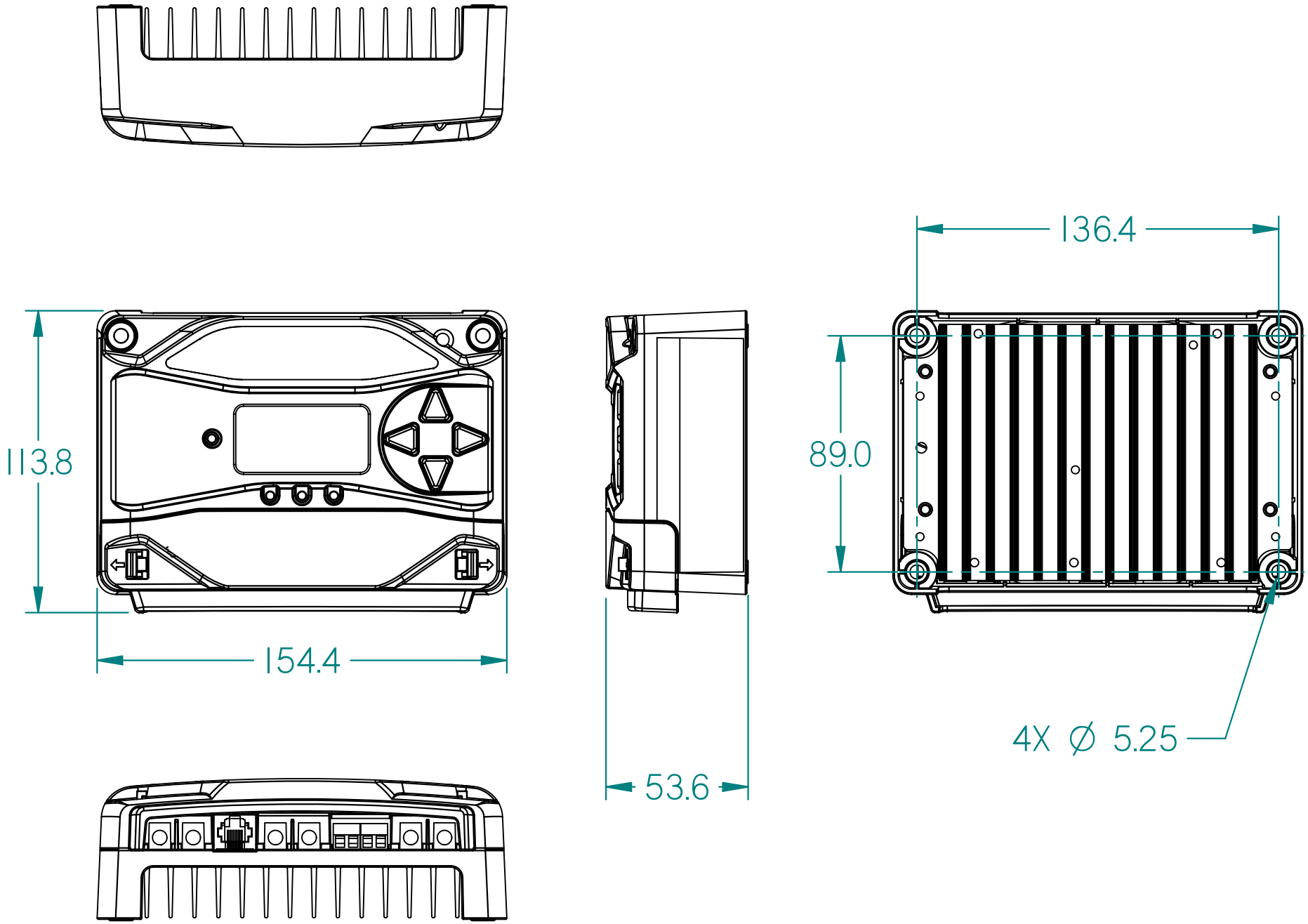
136.4
113.8
89.0
154.4
53.6
4X ∅ 5.25